Safer Running of Processes and Risk Minimisation in the Operation of Plants and Machines

Safety-related Sounders and Flashing Lights

Edition 15

SHARING COMPETENCE

Pfannenberg
ELECTRO-TECHNOLOGY FOR INDUSTRY

Functional Safety IEC 61508 | IEC 61511 (SIL)

SOUNDER
DS SERIES

FLASHING LIGHT
Quadro SERIES

ALL-ROUND LIGHT
PMF SERIES

Functional Safety EN ISO 13849-1 (PL)

Since 1st June 2015, the European Directive, Seveso III, has been implemented as national law. In Germany, this occurs with the Amendment to the Hazardous Incident Ordinance (12 BImSchV). Official, government inspections and monitoring will have even more influence in the new Hazardous Incident Ordinance.

Basic obligations are to take precautions to prevent hazardous incidents and the possible consequences thereof. This includes equipping the operating area with sufficient warning, alerting and safety facilities. For many years Pfannenberg has provided SIL/PL compliant signalling technology for harsh industrial environments. Equipped with the key safety data, the sounders and flashing lights can be integrated in the safety concept of machines and plants without any problems.

HAZARD GRAPH ACCORDING TO IEC 61508

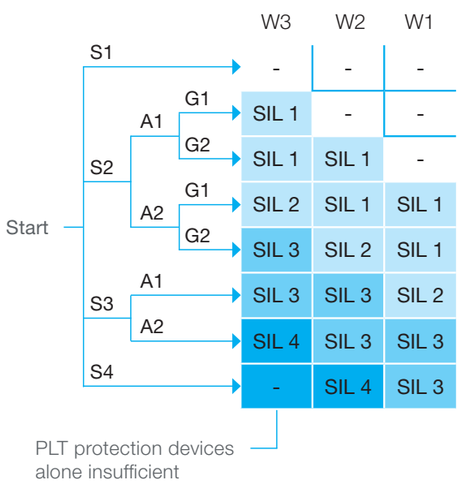

S = Extent of damage
S1 minor injury of a person
S2 serious, irreversible injury of one or more people or death of one person
S3 death of several people
S4 disastrous effects with several dead

A = Likelihood of people being in the area
A1 rarely to slightly more often
A2 frequently to continuously

G = Danger prevention
G1 possible under certain conditions
G2 barely possible

W = Likelihood of occurrence
W1 very small
W2 small
W3 relatively high

SAFETY INSTRUMENTED SYSTEM SIS (SAFETY LOOP)

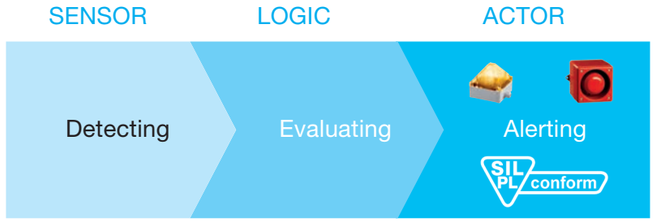

As a rule, alarm equipment performs a safety protection function on machines and systems. Therefore, the consequences of an error in the signaling devices always present a potential risk if not seen.

A hazard graph is not only an important element for the classification of the system or plant, it also clearly illustrates how complex the preliminary work is for the realisation and implementation of projects.

Machinery directive 2006/42/EG has been valid since the 1st January 2010. It was signed on 17 May 2006 and published in the Official Journal of the European Union (OJ L 157) on 9 June 2006. Two safety standards became effective with the machinery directive. On the one hand, DIN EN ISO 13849-1, which replaces Norm DIN EN 954-1 of the old machinery directive 98/37/EG. On the other hand DIN EN 62061.

Objective of these safety norms is to minimize risks in the operation of machines. Therefore, the requirements for the certification of products for machine and plant manufacturers were increased. Probability considerations, amongst other things, have an impact on the regulation of the safety of components. In order to keep the existing residual risk of a machine or plant as low as possible, alarm devices which have a high functional safety are required. They should also alert about danger via visual or audible warning signals.

RISK ASSESSMENT

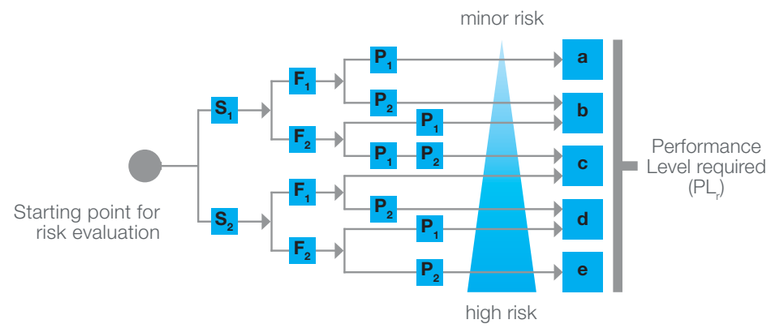

Determination of the required Performance Levels (PL_r)

RISK PARAMETERS

- S – Severity of the injury
  S_1 = minor injuries (normally reversible)
  S_2 = serious injuries, including death (normally irreversible)
- F – Frequency and/or length of exposure to the hazard
  F_1 = rarely to more often and/or short periods
  F_2 = frequently to continuously and/or long duration
- P – Possibilities to avoid danger
  P_1 = possible under certain conditions
  P_2 = barely possible

THE PFANNENBERG GROUP SUBSIDIARIES

Pfannenberg Europe GmbH
Werner-Witt-Straße 1
21035 Hamburg
Germany

Phone: +49 40 73412 156
Telefax: +49 40 73412 101
Email: customercare@pfannenberg.com
Web: www.pfannenberg.com

Pfannenberg France, Rueil-Malmaison
Phone: +33 1 4708 4747
Email: info@pfannenberg.fr

Pfannenberg United Kingdom, Rotherham
Phone: +44 1709 36 4844
Email: info@pfannenberg.co.uk

Pfannenberg Italia, Fidenza (PR)
Phone: +39 0524 516 711
Email: info@pfannenberg.it

Pfannenberg USA, N.Y.
Phone: +1 716 685 6866
Email: info@pfannenbergusa.com

Pfannenberg Russia, St. Petersburg
Phone: +7 812 612 8106
Email: info@pfannenberg.ru

Pfannenberg Singapore, Singapore
Phone: +65 6293 9040
Email: info@pfannenberg.com.sg

Pfannenberg China, Suzhou
Phone: +86 512 6287 1078
Email: info@pfannenberg.cn

Pfannenberg Brazil, Indaiatuba
Phone: +55 19 3935 7187
Email: info@pfannenberg.com.br

075000244

Pfannenberg
ELECTRO-TECHNOLOGY FOR INDUSTRY